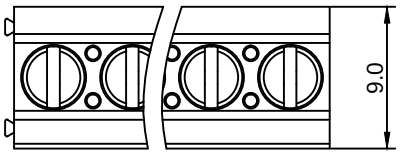

Material :

- ⓐ Housing : PA66(UL94V-0)
- ⓑ Screws : Steel , $Cr^{3+}Zn$ Plated
- ⓒ Cage : Brass , Ni Plated
- ⓓ Pin Header : Brass , Tin Plated
- ⓔ Cover : PA66(UL94V-0)

Electrical :

	UL	IEC
1.Rated Voltage :	300V	250V
2.Rated Current :	12A	18A
3.Torque Value :	M2.5 , 3.54Lb.in	M2.5 , 0.4N.m
4.Wire Range:	26-12AWG	0.5-2.5mm^2

5.Stripping Length : 6-7mm
6.Withstanding Voltage : AC2000V/1Min.
7.Operating Temperature : -40°C~+105°C
8.RoHS Compliance
9.Safety Approval : c UL us
10.Undimensioned Tolerances:

Pitch Range In mm			Nominal Dimension Range In mm					— ⌒ ▱
≤6	6 ~ 10	10 ~ 24	≤30	30 ~ 60	60 ~ 100	100 ~ 150	>150	0.05/10 ∠
±0.10	±0.15	±0.25	±0.20	±0.30	±0.50	±0.70	±1.00	±0.1°

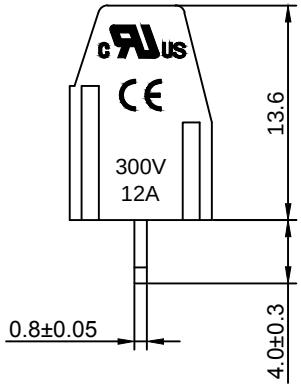

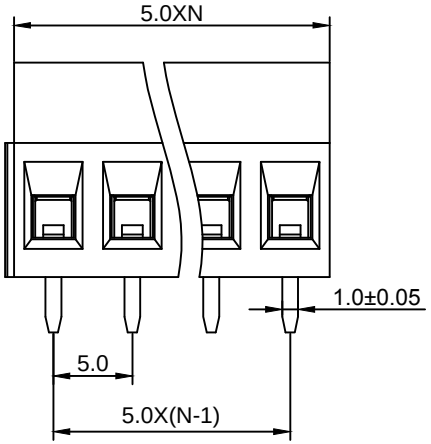

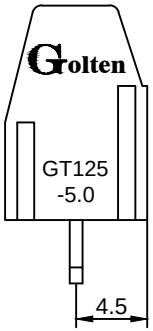

GT125 - 5.0 - XXP - X X - 00 AH

① ② ③ ④ ⑤ ⑥ ⑦

① Series NO.

② Pitch

③ Poles
02 02Contacts
03 03Contacts
...
24 24Contacts

④ 1 Single Pitch
2 Double Pitch

⑤ Color:
1 Grey
2 Blue
3 Black
4 Green(Standard for AH)
5 Orange
6 Red
7 Transparent
8 Yellow
9 White

⑥ Customer Request: 00--Standard

⑦ AH--Standard(PA66)

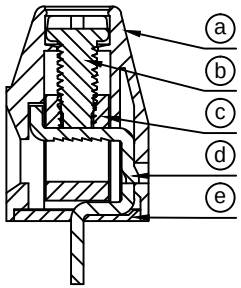

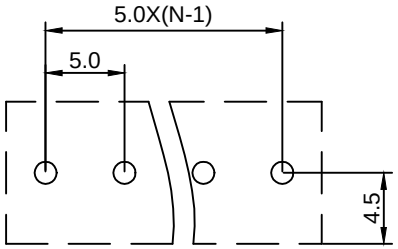

Golten® 宁 波 冠 泰 电 子 有 限 公 司 NINGBO GOLTEN ELECTRONICS CO., LTD.			
APPD: MA_8/23/17 '	Part NO.	GT125-5.0-XXP-XX-00AH	
CHKD: Yu_8/22/17 '			
DRFT: Chen_8/21/17 '	DRAWING NO.	REV	1
		SHEET	1/1
THIRD ANGLE PROJECTION	MM (INCH) DO NOT SCALE DRAWING	SCALE	1/1

DETACHED LISTS